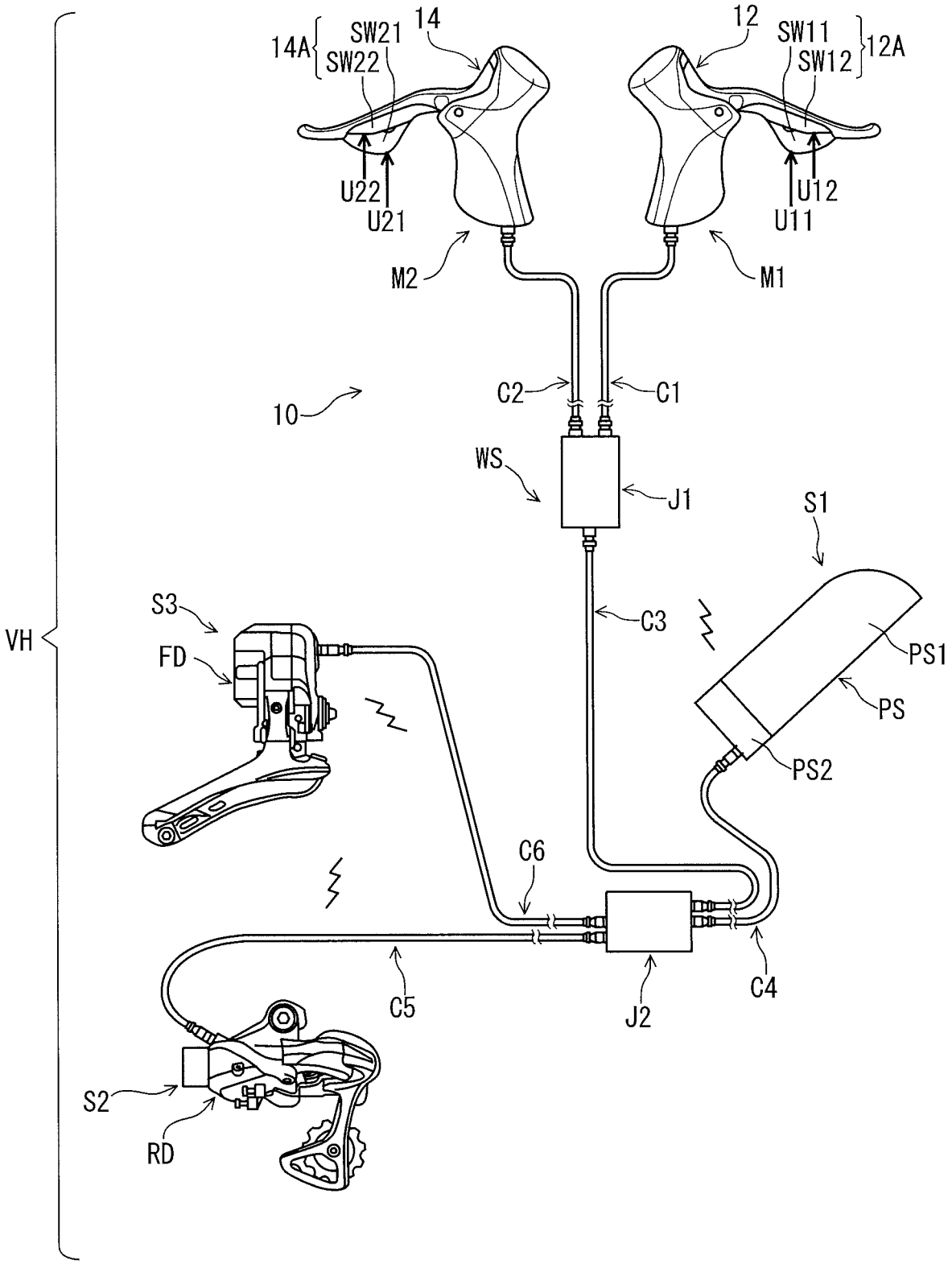
14A
SW21
SW22
14
12
SW11
SW12
12A
U22
U21
U12
U11
M2
M1
10
C2
C1
WS
J1
S1
S3
FD
C3
PS1
PS
PS2
VH
C6
C5
J2
C4
S2
RD

FIG. 2